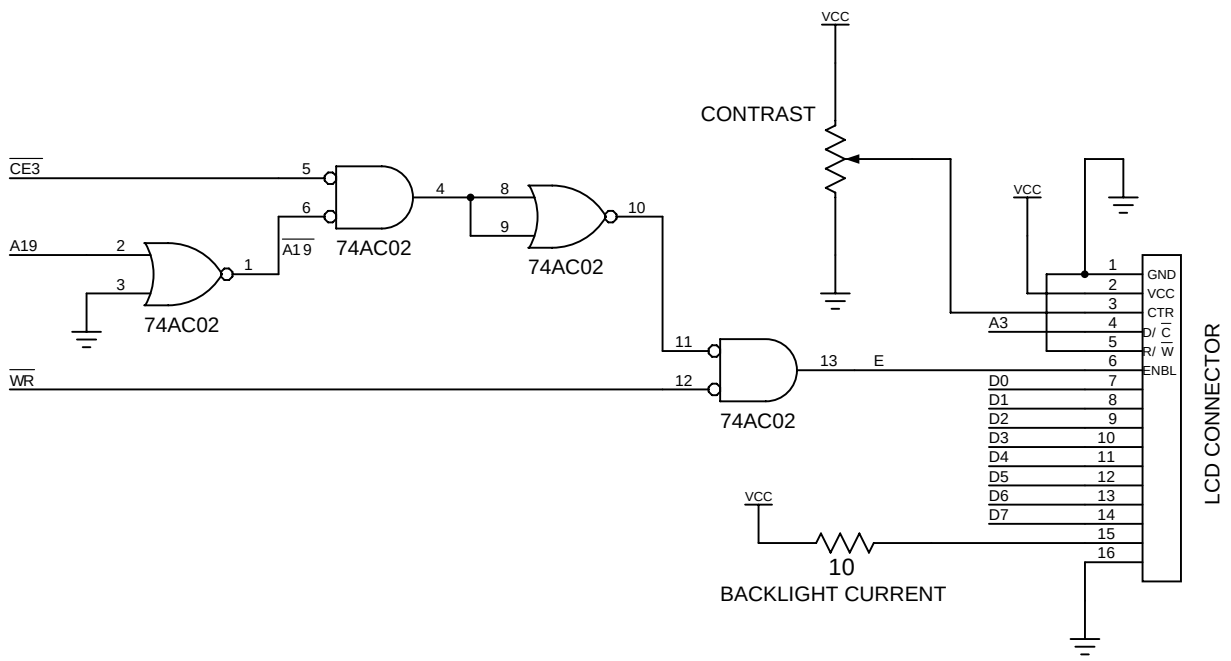

Title	
Size A	Number
Date	
Filename	

D

1

2

3

4

Rev

Drawn by

Sheet of

D